承 认 书

SPECIFICATION FOR APPROVAL

客户 Customer：	
产品名称 Customer：	一体成型电感
型号规格 Customer：	0420
承认书日期 Date：	2025.09.10

确认后签名，并返回一份。
PLEASE RETURN TO US COPY OF " SPECIFICATION FOR APPROVAL " WITH YOUR APPROVED SIGNATURES.

领界电子:	制作(MADE BY)	审核(CHECKED BY)	批准（APPROVED BY）
	杨晓	黄春葵	蔡冰
客户（CUSTOMER）	客户要求（CUSTOMER REQUIRE）: 承认(APPROVED BY):		

揭阳市领界电子有限公司
地址：揭阳市榕城区凤美街道万洋科技众创城7栋6楼
电话：13686801482

CUSTOMER（客户）:	PAGE: 1 OF 6
ITEM: 一体0420	Customer's ITEM:

1.SHAPES AND DIMENSIONS 外形尺寸 (Unit:mm)

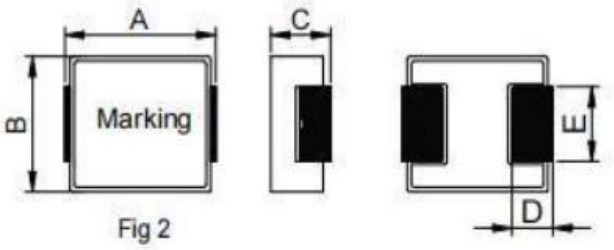

TYPE（型号）	A	B	C	D	E
0420	4.4±0.35	4.1±0.2	2.0Max	1.0±0.3	2.0±0.3

2.Part Numbering（编码原则）:

0420	A	100	M
(1)	(2)	(3)	(4)

(1)Dimension：04=04 Series 20=产品高度2.0mm
(2)Materials Type ：A=合金粉 C ＝羰基粉
(3)Inductance：4R7=4.7uH 100= 10uH 101= 100uH
(4)Inductance Tolerance ：J=±5% K=±10% L=±15% M=±20%

3.APPLICATIONS 用途

PAD,笔记本电脑, 台式机,服务器,音箱, 网通,安防,手机,智能家居,储能设备等

PAD,Notebook,Server,audio,netcom,security,mobile phone,smart home,Energy product ...

CUSTOMER（客户）:	PAGE: 2 OF 6
ITEM: 一体0420	Customer's ITEM:

4. Electrical Characteristics 电气特性

Part number	Inductance (uH)	Rdc (mΩ)		Heat Rating Current DC Amps. Idc (A)	Saturation Current DC Amps. Isat (A)
	100KHz/0.25V	Typical	Max	Max	Max
0420A-R68M	0.68±20%	16.00	18.00	6.00	9.00
0420A-1R0M	1.00±20%	24.00	27.00	4.50	7.00
0420A-1R2M	1.20±20%	24.00	27.00	4.50	7.00
0420A-1R5M	1.50±20%	38.00	46.00	4.00	6.00
0420A-2R2M	2.20±20%	52.00	58.00	3.00	5.00
0420A-3R3M	3.30±20%	74.00	87.00	2.50	4.00
0420A-4R7M	4.70±20%	92.00	105.0	2.20	3.00
0420A-6R8M	6.80±20%	162.0	178.0	2.00	2.50
0420A-100M	10.00±20%	256.0	282.0	1.60	1.80
0420A-150M	15.00±20%	406.0	432.0	1.40	1.60
0420A-220M	22.00±20%	554.0	582.0	1.20	1.35

(1) 所有的测试数据在25℃的环境温度下进行.

All test data is referenced to 25℃ ambient .

(2) 在通过热额定电流值(Idc)时，线圈会产生温升 40℃左右的变化.

When applying the heat rating current DC（Idc) to coil, it will cause an approximate △T of 40 ℃.

(3) 在通过额定饱和电流Isat时，线圈电感值会比初始电感值下降30%左右.

When applying the saturation current DC(Isat) to coil, it will cause the initial inductance valuel to drop 30%Typical.

(4) 操作温度范围－55℃到+155℃.

Operating Temperature Range-55℃ to +155℃.

CUSTOMER（客户）:	PAGE: 3 OF 6
ITEM: 一体0420	Customer's ITEM:

5. Material List 材料清单

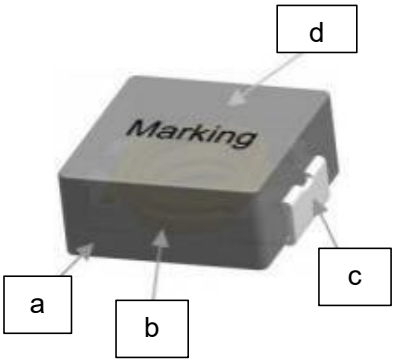

No.	项目ITEM	材料Materials
a	磁芯Core	金属合金Metal alloy
b	线Wire	漆包线Enameled wire or equivalen
c	端子Terminal	铜+镍+锡Copper+Nickel+Tin
d	油墨Ink	KGK-JET LTH20-Black or equivalen

6. Storage conditions/Matters need attention 储存条件/注意的事项

(1). 贮存温度、湿度条件:

Storage temperature and humidity conditions :

a .产品包装与载体:温度- 10℃~ + 40℃,相对湿度低于60%

Product packing with Carrier tape: -10℃~+40℃ and less than 60% RH

b.单独的产品:温度-20℃~ + 60℃,相对湿度低于60% Product alone: -20℃~+60℃ and less than 60% RH

(2). 产品在6个月内使用(注意:产品一经拆开包装,须尽快使用)

Products should be used within 6 months. (Note that the product should be used as soon as possible once it is folded)

(3). 包装材料应保存在空气中不存在氯或硫的地方

The packaging material should be kept where no chlorine or sulfur exists in the air

(4). 不要用手指触摸电极(焊接端子), 因为这可能导致焊接能力的下降

Do not touch the electrodes (soldering terminals) with fingers as this may lead to deterioration of solder ability.

(5) . 个别零件强烈建议使用镊子或真空取料机，散装搬运应确保尽量减少磨损和机械冲击

The use of tweezers or vacuum pick-ups is strongly recommended for individual components.Bulk handling should ensure that abrasion and mechanical shock are minimized.

CUSTOMER（客户）:	PAGE: 4 OF 6
ITEM: 一体0420	Customer's ITEM:

7.Packing Information 包装

(1). Tape&Reel Dimension 载带及卷轴尺寸:

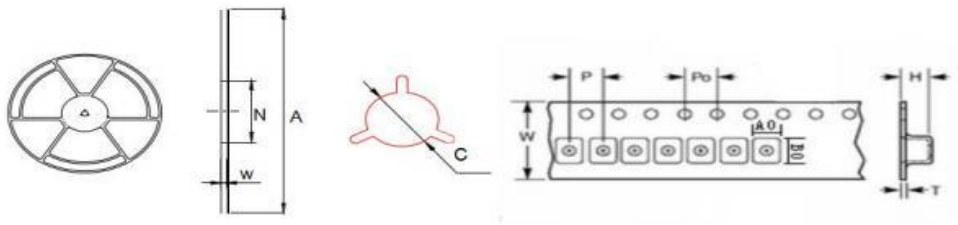

Type	Reel Dimensions（mm）				Tape Dimensions（mm）						
	A	N	W	C	W	P	P0	A0	B0	H	T
0420	330	100	12.4	13.2 ±0.2	12±0.3	8±0.1	4±0.1	4.4±0.1	4.9±0.1	2.3±0.05	0.35±0.05
0520	330	100	12.4	13.2 ±0.2	12±0.3	8±0.1	4±0.1	5.4±0.1	5.9±0.1	2.3±0.05	0.35±0.05
0530	330	100	12.4	13.2 ±0.2	12±0.3	8±0.1	4±0.1	5.4±0.1	5.9±0.1	3.3±0.05	0.35±0.05
0630	330	100	12.4	13.2 ±0.2	16±0.3	12±0.1	4±0.1	6.9±0.1	7.5±0.1	3.3±0.05	0.35±0.05
0650	330	100	12.4	13.2 ±0.2	16±0.3	12±0.1	4±0.1	6.9±0.1	7.5±0.1	5.2±0.1	0.4±0.05
0850	330	100	12.4	13.2 ±0.2	20±0.3	14±0.4	4±0.1	8.4±0.1	9.5±0.1	5.2±0.1	0.4±0.05
1040	330	100	12.4	13.2 ±0.2	24±0.3	16±0.1	4±0.1	10.4±0.1	11.5±0.1	4.3±0.1	0.35±0.05
1050	330	100	12.4	13.2 ±0.2	24±0.3	16±0.1	4±0.1	10.4±0.1	9.5±0.1	5.2±0.1	0.4±0.05
1265	330	100	12.4	13.2 ±0.2	24±0.3	16±0.1	4±0.1	13.2±0.1	14.4±0.1	6.8±0.1	0.5±0.05

特性Features.

1.小体积(最大尺寸4.75*4.3*2.0mm)，大电流(范围可到22A)，在高频和高温环境 下保持优良的温升电流及饱和电流特性.

Small volume (maximum size 4.75*4.3*2.0 mm) and large current (range up to 22A), maintaining excellent temperature-rise current and saturation current characteristics at high frequency and high temperature

2.磁屏蔽结构，抗电磁干扰(EMI)性能强.

Magnetic shielding structure, anti-electromagnetic interference (EMI) performance is strong.

3.低损耗合金粉末压铸，低阻抗，寄生电容小.

Low loss alloy powder die casting, low impedance, low parasitic capacitanceg.

5.高效率，应用频率宽，适用范围广.

High efficiency, wide application frequency and wide application range.

CUSTOMER（客户）:	PAGE: 5 OF 6
ITEM: 一体0420	Customer's ITEM:

7.Packing Information 包装

(2). Tape&Ree Carrier Packing:

0420-3000pcs/Reel

CARTON:MIDDLE PACKAGING : 4 Reel /BOX

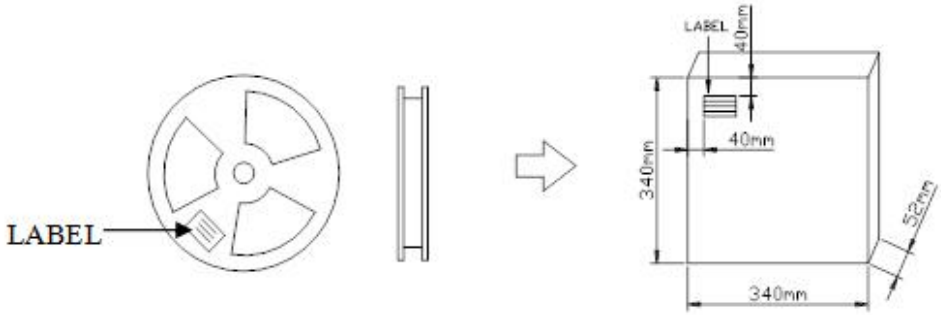

（3）EXTERNAL PACKAGING :2BOX / CARTON

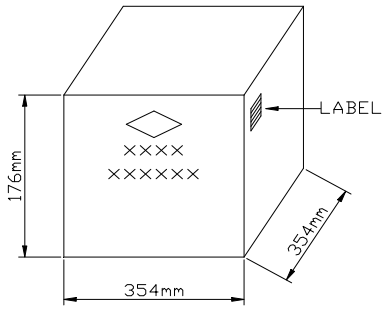

ITEM（型号）	REEL（盘装）	BOX（盒装）	CARTON（箱装）
0420	3000pcs/reel	12000pcs/Inner box	36000pcs/Carton
0520	2000pcs/reel	6000pcs/Inner box	18000pcs/Carton
0530	2000pcs/reel	6000pcs/Inner box	18000pcs/Carton
0630	1000pcs/reel	3000pcs/Inner box	9000pcs/Carton
0650	1000pcs/reel	3000pcs/Inner box	9000pcs/Carton
0850	1000pcs/reel	2000pcs/Inner box	6000pcs/Carton
1040	1000pcs/reel	2000pcs/Inner box	6000pcs/Carton
1050	800pcs/reel	1600pcs/Inner box	4800pcs/Carton
1265	500pcs/reel	1000pcs/Inner box	3000pcs/Carton

CUSTOMER（客户）:	PAGE: 6 OF 6
ITEM: 一体0420	Customer's ITEM:

8.Reliability Test 可靠性测试

项目/Item	要求/Performance	测试方法/Test Condition
焊接能力测试 Solder Ability Test	焊料端子必须有90%以上着锡 More than 90% of terminal electrode should be coveredwith solder.	端子浸入助焊剂然后浸入245±5℃锡炉中5秒 Terminal in flux and then into 245±5 ℃ tin furnace 5seconds
端子强度 Terminal Strength	无电极剥离和断线 the terminal should not peel off	将线圈的端子焊接在基板上,分别在 X,Y ,Z 3 个向施加5N(0.5kgf),时间 10±5 秒 After soldering between copper plate and electrode.sample is pushed in three directions of X,Y and Z withforce of 5N(0.5kgf) for 10±5 seconds
振动测试 Vibration	1. 电极没有分离 2.无明显的外观缺陷 1.No separation or indication of electrode. 2.No case deformation or change in appearance.	振动1小时后，电感偏差在±10%以内.在扫描振动的三个方向(10~55~ 10HZ)中,每一个方向都有1.5mmP-P振幅 Inductance deviation within ± 10% after vibration for 1hour. In each of three orientations at Sweep vibration(10~55~ 10HZ) with 1.5mmP-P amplitudes.
坠落试验 Drop Test	1. 电感偏差在±10%以内 2.无明显的外观缺陷 1. The inductance deviation is within ±10%. 2.No case deformation or change in appearance.	用981m/s2 (100G)将产品包装后在1米高度自然落下,有三种不同的方向 981m/s2 (100G) is used to automatically drop the product at a height of 1 meter after packaging. and thereare three different directions
高温存储测试 High Temperature Storage Test	1.无明显的外观缺陷 2.感值变化不超过10% 3.直流电阻变化不超过10% 1.No case deformation or change in appearance 2.△L/L≦10% 3.△DCR/DCR≦10%	温度:-40℃±3℃时间:500±2小时，测试时间不少于1小时，不多于2小时 Temperature:-40℃±3℃ Time:500±2 hours. Tested not less than 1 hour, nor more than 2 hours at room.
低温存储测试 Low Temperature Storage Test	1.无明显的外观缺陷 2.感值变化不超过10% 3.直流电阻变化不超过10% 1.No case deformation or change in appearance 2.△L/L≦10% 3.△DCR/DCR≦10%	温度:-40℃±3℃时间:500±2小时，测试时间不少于1小时，不多于2小时 Temperature:-40℃±3℃ Time:500±2 hours. Tested not less than 1 hour, nor more than 2 hours at room.
高温湿度测试 High Temperature Humidity Test	1.无明显的外观缺陷 2.感值变化不超过10% 3.品质因数变化不超过30% 4.直流电阻变化不超过10%. 1.No case deformation or change in appearance 2.△L/L≦10% 3.△Q/Q≦30% 4.△DCR/DCR≦10%	温度:85℃±3℃ ， 湿度:85±5% RH ，测试时间:500±2小时，测试时间不少于1小时，室温下不超过2小时 Temperature:85℃±3℃. Humidity:85±5%RH Test Time:500±2 hours Tested not less than 1 hour. Nor more than 2 hours at room temperature
热冲击试验 存储测试 Thermal Shock Test Storage Test	1.无明显的外观缺陷 2.感值变化不超过10% 3.直流电阻变化不超过10% 1.No case deformation or change in appearance 2.△L/L≦10% 3.△DCR/DCR≦10%	从-40℃试验30分钟,然后温度冲击到125℃试验30分钟,作为一个循环,共20次周期 First–40℃ for 30 Minutes, last 125℃ for 30 Minutes as 1 cycle. Go through 20 cycles.